MOUNTING AND OPERATING INSTRUCTIONS

EB 8391 EN

Translation of original instructions

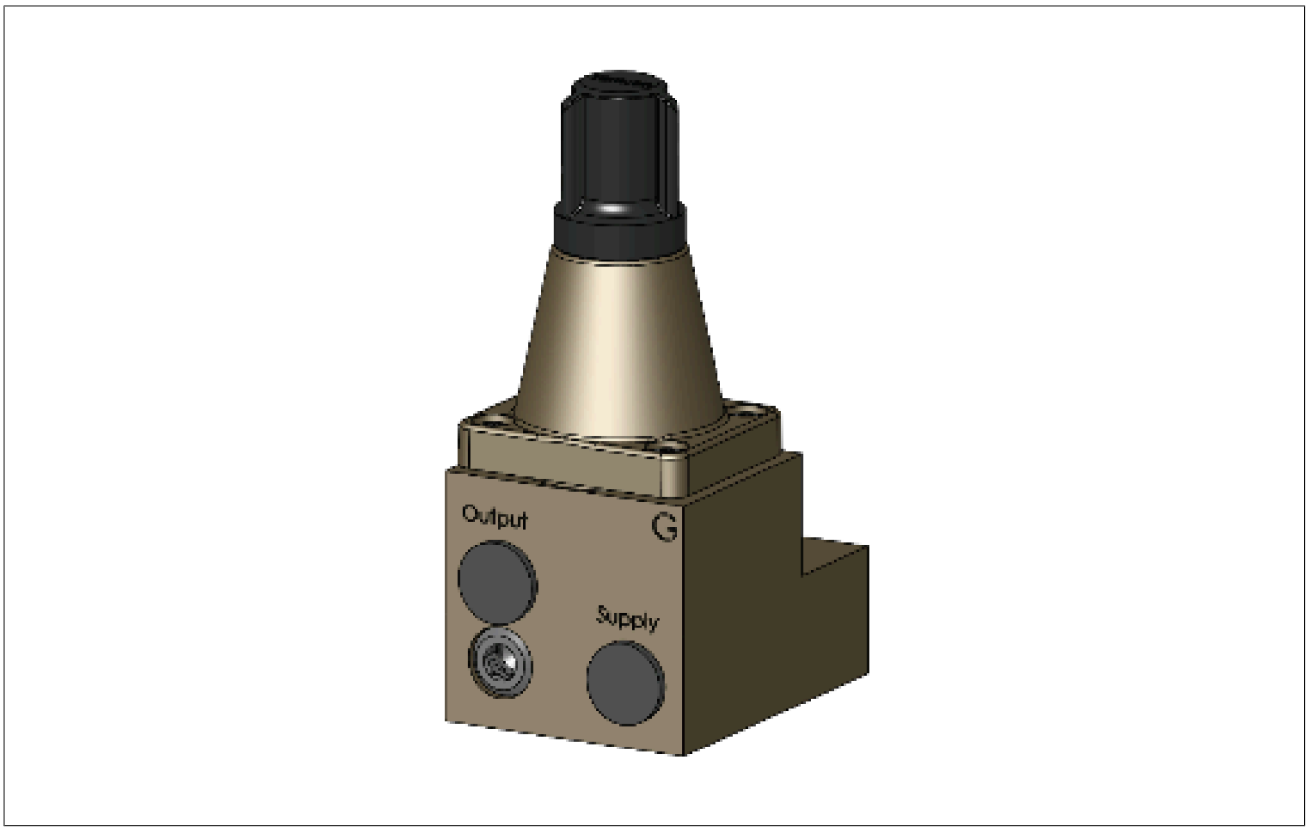

Type 3709 Pneumatic Lock-Up Valve

Edition February 2026

Note on these mounting and operating instructions

These mounting and operating instructions (EB) assist you in mounting and operating the device safely. The instructions are binding for handling SAMSON devices. The images shown in this document are for illustration purposes only. The actual product may vary.

⇨ For the safe and proper use of these instructions, read them carefully and keep them for later reference.

⇨ If you have any additional questions not related to the contents of this document, contact SAMSON's After-sales Service (aftersales-fr@samsongroup.com).

Documents relating to the device, such as the mounting and operating instructions, are available on our website:
▶ https://www.samsongroup.com/en/downloads/documentation

Definition of signal words

⚠ DANGER

Hazardous situations which, if not avoided, will result in death or serious injury

⚠ WARNING

Hazardous situations which, if not avoided, could result in death or serious injury

NOTICE

Property damage message or malfunction

Note

Additional information

Tip

Recommended action

1 Safety instructions and measures ... 4
1.1 Notes on possible personal injury ... 5
1.2 Notes on possible property damage ... 5

2 Markings on the device ... 6
2.1 Nameplate ... 6
2.2 Article code ... 6

3 Design and principle of operation ... 8
3.1 Pneumatic lock-up valve without booster ... 8
3.2 Pneumatic lock-up valve with booster (single-acting) ... 8
3.3 Pneumatic lock-up valve with booster (double-acting) ... 9
3.4 Versions ... 9
3.4.1 Direct attachment to positioners ... 12
3.5 Technical data ... 13
3.6 Accessories ... 14
3.7 Dimensions in mm ... 15

4 Shipment and on-site transport ... 21
4.1 Accepting the delivered goods ... 21
4.2 Removing the packaging from the pneumatic lock-up valve ... 21
4.3 Transporting the pneumatic lock-up valve ... 21
4.4 Storing the pneumatic lock-up valve ... 21

5 Installation ... 22
5.1 Installation conditions ... 22
5.2 Preparation for installation ... 22
5.3 Mounting the pneumatic lock-up valve ... 23
5.3.1 Mounting onto Type 3730 or TROVIS 3730 Positioner (mounting version since 2019) ... 23
5.3.2 Mounting onto Type 3730 or TROVIS 3730 Positioner (mounting version before 2019) ... 24
5.3.3 Mounting onto a Type SRP 1200 Rotary Actuator ... 25
5.3.4 NAMUR attachment between solenoid valve and rotary actuator (sandwich style) ... 26
5.4 Pneumatic connections ... 27

6 Start-up ... 28
6.1 Fine-tuning ... 28

7 Malfunctions ... 29
7.1 Troubleshooting ... 29

8 Servicing ... 30
8.1 Periodic inspection and testing of the pneumatic lock-up valve ... 30

9 Decommissioning ... 31

10 Removal ... 32

11 Repair ... 33
11.1 Returning devices to SAMSON ... 33

12 Disposal ... 34

13 Appendix ... 35
13.1 After-sales service ... 35
13.2 Spare parts ... 36

1 Safety instructions and measures

Intended use

The pneumatic lock-up valve shuts off the signal pressure line either when the supply pressure falls below an adjusted value or upon complete air supply failure. This causes the pneumatic actuator to remain in its last position.

The pneumatic lock-up valve is designed to operate under exactly defined conditions (e.g. operating pressure, temperature). Therefore, operators must ensure that the pneumatic lock-up valve is only used in operating conditions that meet the specifications used for sizing the device at the ordering stage. In case operators intend to use the pneumatic lock-up valve in applications or conditions other than those specified, contact SAMSON.

SAMSON does not assume any liability for damage resulting from the failure to use the device for its intended purpose or for damage caused by external forces or any other external factors.

⇨ Refer to the technical data and nameplate for limits and fields of application as well as possible uses.

Reasonably foreseeable misuse

The pneumatic lock-up valve is not suitable for the following applications:

– Use outside the limits defined during sizing and by the technical data

Furthermore, the following activities do not comply with the intended use:

– Use of non-original spare parts
– Performing service and repair work not described

Qualifications of operating personnel

The pneumatic lock-up valve must be mounted, started up and serviced by fully trained and qualified personnel only; the accepted industry codes and practices are to be observed. According to these mounting and operating instructions, trained personnel refers to individuals who are able to judge the work they are assigned to and recognize possible hazards due to their specialized training, their knowledge and experience as well as their knowledge of the applicable standards.

Personal protective equipment

No personal protective equipment is required for the direct handling of the pneumatic lock-up valve.

Work on the valve or valve accessories may be necessary when mounting or removing the device.

⇨ Observe the requirements for personal protective equipment specified in the valve documentation.

⇨ Check with the plant operator for details on further protective equipment.

Revisions and other modifications

Revisions, conversions or other modifications of the product are not authorized by SAMSON. They are performed at the user's own risk and may lead to safety hazards, for example. Furthermore, the product may no longer meet the requirements for its intended use.

Warning against residual hazards

The pneumatic lock-up valve has a direct influence on the control valve. To avoid personal injury or property damage, plant operators and operating personnel must prevent hazards that could be caused in the control valve by the process medium, the operating pressure, the signal pressure or by moving parts by taking appropriate precautions. Plant operators and operating personnel must observe all hazard statements, warning and caution notes in these mounting and operating instructions.

If inadmissible motions or forces are produced in the pneumatic actuator as a result of the supply pressure level, it must be restricted using a suitable supply pressure reducing station.

Responsibilities of the operator

Operators are responsible for proper use and compliance with the safety regulations. Operators are obliged to provide these mounting and operating instructions as well as the referenced documents to the operating personnel and to instruct them in proper operation. Furthermore, operators must ensure that operating personnel or third parties are not exposed to any danger.

Responsibilities of operating personnel

Operating personnel must read and understand these mounting and operating instructions as well as the specified hazard statements, warnings and caution notes. Furthermore, operating personnel must be familiar with the applicable health, safety and accident prevention regulations and comply with them.

Referenced documents

The following documents apply in addition to these mounting and operating instructions:

– The mounting and operating instructions of the components with which the pneumatic lock-up valve is combined (valve, actuator, solenoid valve etc.).

1.1 Notes on possible personal injury

⚠ WARNING

Risk of injury due to high pressure inside device.

The pneumatic lock-up valve is pressurized. Improper removal of the installed pneumatic lock-up valve or opening of the body can lead to device components bursting and cause serious injury.

⇨ Disconnect the signal pressure before removing an installed pneumatic lock-up valve or opening the valve body.

⚠ WARNING

Risk of damage to hearing due to loud noise.

Without a noise-reducing element screwed into the exhaust port, the pneumatic lock-up valve generates a loud noise on venting.

⇨ Wear hearing protection.

1.2 Notes on possible property damage

NOTICE

Risk of damage to the pneumatic lock-up valve due to contamination.

Improper handling may allow dirt or other foreign particles to enter the device and lead to malfunctioning or damage.

⇨ Protect the pneumatic lock-up valve against dirt particles entering it during mounting, transport or storage.

NOTICE

Risk of malfunction due to the incorrect mounting of the pneumatic lock-up valve.

The proper shut-off of the signal pressure line is only guaranteed by the pneumatic lock-up valve when it is mounted properly.

⇨ Mount the pneumatic lock-up valve as close to the actuator as possible.

2 Markings on the device

2.1 Nameplate

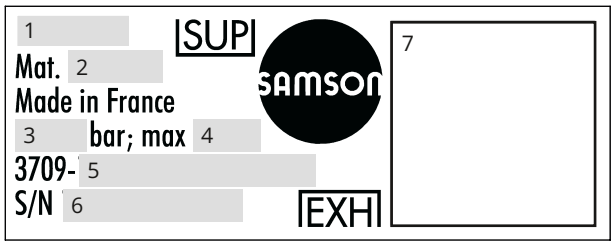

Fig. 1: *Nameplate of Type 3709 Pneumatic Lock-up Valve*

1 Date of manufacture (MM-YYYY)
2 Material number
3 Signal pressure
4 Supply pressure
5 Article code
6 Serial number
7 DataMatrix code (electronic nameplate)
SUP Supply
EXH Exhaust

2.2 Article code

Pneumatic lock-up valve	**Type 3709-**	x	x	x	x	x	x	x	x	0000000000
Device version		|	|	|	|	|	|	|	|	
For positioner attachment, K_{VS} 0.2; ¼" connection		0	1	|	|	|	|	|	|	
Can be hooked up as required, K_{VS} 0.2; ¼" connection		0	1	|	|	|	|	|	|	
Can be hooked up as required, K_{VS} 4.3; ½" connection		0	4	|	|	|	|	|	|	
For actuator according to VDI/VDE 3845, ¼"; K_{VS} 2.0		0	5	|	|	|	|	|	|	
For actuator according to VDI/VDE 3845, ½"; K_{VS} 4.3		0	6	|	|	|	|	|	|	
For actuator and Type 3967 Solenoid Valve according to VDI/VDE 3845, ¼"; K_{VS} 2.0		0	7	|	|	|	|	|	|	
For actuator and Type 3967 Solenoid Valve according to VDI/VDE 3845, ½"; K_{VS} 4.3		0	8	|	|	|	|	|	|	
For actuator and solenoid valve according to VDI/VDE 3845, ¼"; K_{VS} 2.0; sandwich-style		0	9	|	|	|	|	|	|	
For actuator and solenoid valve according to VDI/VDE 3845, ½"; K_{VS} 4.3; sandwich-style		1	0	|	|	|	|	|	|	
For double-acting actuator, hook-up as required, ½"; K_{VS} 4.3		1	1	|	|	|	|	|	|	
For double-acting actuator according to VDI/VDE 3845, ½"; K_{VS} 4.3		1	2	|	|	|	|	|	|	
Connecting thread			|	|	|	|	|	|	|	
Input and output ¼ NPT			1/2/5	0	1	|	|	|	|	
Input and output G ¼			1/2/5	0	2	|	|	|	|	
Input and output ½ NPT, supply air ¼ NPT			4/6/12	0	3	|	|	|	|	
Input and output G ½, supply air G ¼			4/6/12	0	4	|	|	|	|	
Input and output connections without thread, supply air ¼ NPT			7/8/9/10	0	5	|	|	|	|	
Input and output connections without thread, supply air G ¼			7/8/9/10	0	6	|	|	|	|	
Input G ¼, output connection without thread, supply air G ¼			5	0	7	|	|	|	|	
Input ¼ NPT, output connection without thread, supply air ¼ NPT			5	0	8	|	|	|	|	
Input G ½, output connection without thread, supply air G ¼			6/13	0	9	|	|	|	|	
Input ½ NPT, output connection without thread, supply air ¼ NPT			6/13	1	0	|	|	|	|	
Adjustment range						|	|	|	|	
0.5 to 6 bar						1	|	|	|	
1.5 to 6 bar						2	|	|	|	
Ambient temperature							|	|	|	
-25 to +80 °C							0	|	|	
-40 to +80 °C							1	|	|	
-45 to +80 °C							2	|	|	

Body material	|	|
Aluminum	0	|
Stainless steel	1	|
Compatibility with paint		|
Without		0
Free of substances that impair paint adhesion		1

3 Design and principle of operation

The pneumatic lock-up valve shuts off the signal pressure line either when the air supply falls below an adjusted value or upon complete air supply failure. This causes the pneumatic actuator to remain in its last position.

The versions with booster allows higher air capacities to be used.

3.1 Pneumatic lock-up valve without booster

Type 3709-01 and Type 3709-02

Fig. 2

The supply air (p_z) creates a force on the diaphragm (3), which is balanced by the spring (5). When the force produced on the diaphragm is greater than the spring force, input (p_e) and output (p_a) are connected, i.e. the signal pressure supplied by the positioner is transmitted unobstructed to the pneumatic actuator. When the supply air pressure falls below the adjusted value, the spring force dominates and the spring (5) moves the plug (2) fully into the seat (8). As a result, the pressure in the pneumatic actuator is blocked.

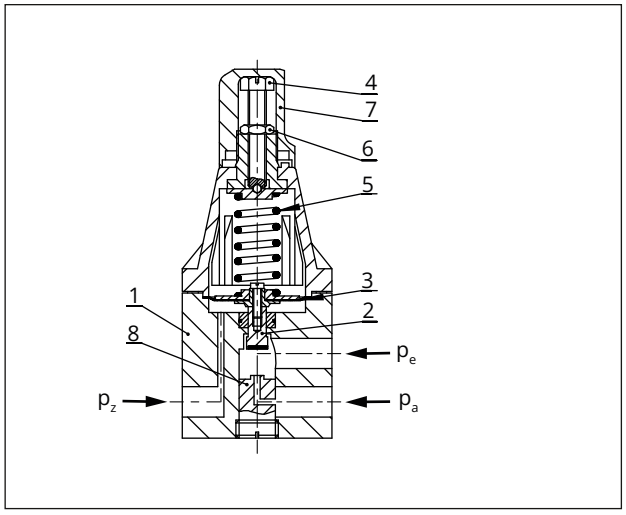

Fig. 2: *Control head of pneumatic lock-up valve (Type 3709-01/-02)*

1 Body (control head)
2 Plug
3 Diaphragm
4 Adjustment screw
5 Spring
6 Lock nut
7 Cap
8 Seat
p_z Supply air
p_e Input
p_a Output

3.2 Pneumatic lock-up valve with booster (single-acting)

Type 3709-04 to Type 3709-08

Fig. 3

The supply air (p_z) creates a force on the diaphragm (3), which is balanced by the spring (5). When the force created at the diaphragm is greater than the spring force, the pressure flows internally to the booster and serves as the control pressure (p_{st}). A double-seat system is used to release the pressure.

– Spool (10) on ball (11)
– Ball (11) on the seat in the body (1)

The control pressure (p_{st}) opens the plug (12) of the booster allowing the air to flow unobstructed to the pneumatic actuator. When the spring force (5) is greater than the force created at the diaphragm (3), the signal pressure line is blocked and the control pressure is vented to the atmosphere.

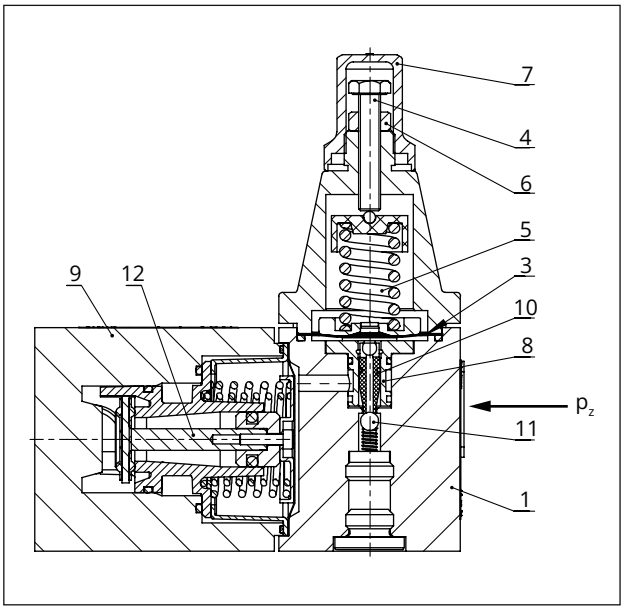

Fig. 3: *Control head and booster of pneumatic lock-up valve (Types 3709-04/-05/-06/-07/-08/-09/10/-12/-13)*

1 Body (control head)
3 Diaphragm
4 Adjustment screw
5 Spring
6 Lock nut
7 Cap
8 Seat

9 Body (booster)
10 Spool
11 Ball
12 Plug (booster)
p_z Supply air
p_{st} Control pressure

3.3 Pneumatic lock-up valve with booster (double-acting)

Type 3709-12 and Type 3709-13

Fig. 3

The supply air (p_z) creates a force on the diaphragm (3), which is balanced by the spring (5). When the force created at the diaphragm is greater than the spring force, the pressure flows internally to the booster and serves as the control pressure (p_{st}). A double-seat system is used to release the pressure.

– Spool (10) on ball (11)
– Ball (11) on the seat in the body (1)

The control pressure (p_{st}) is routed over a capillary tube to both spring systems. This causes both plugs (12) to open in a synchronized manner allowing the air to flow unobstructed to the pneumatic actuator. When the spring force (5) is greater than the force created at the diaphragm (3), the signal pressure line is blocked and the control pressure is vented to the atmosphere.

3.4 Versions

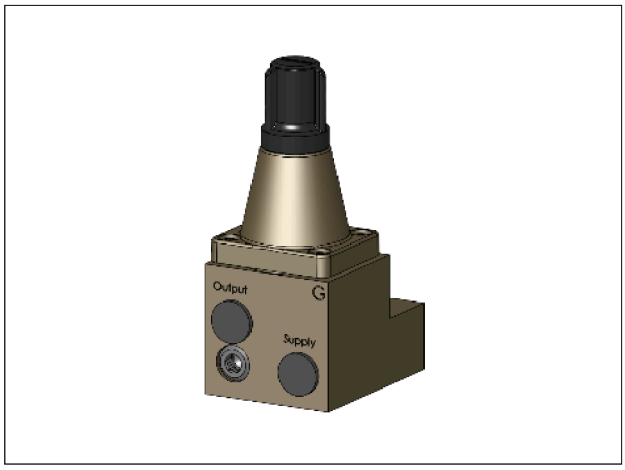

Fig. 4: *Type 3709-01*

Pneumatic lock-up valve for direct attachment to a positioner

G ¼ or ¼ NPT connecting thread

K_{VS} 0.2

Designed for linear actuators and rotary actuators according to VDI/VDE 3845 (not in combination with Types 4708-53/-54/-64 Supply Pressure Regulators)



Fig. 5: *Type 3709-02*

Pneumatic lock-up valve for installation in the signal pressure line in any position as required

G ¼ or ¼ NPT connecting thread

K_{VS} 0.2



Fig. 6: *Type 3709-04*

Pneumatic lock-up valve with booster for installation in the signal pressure line in any position as required

G ½ or ½ NPT connecting thread

K_{VS} 4.3



Fig. 7: *Type 3709-05*

Pneumatic lock-up valve with booster

Input hooked up as required

G ¼ or ¼ NPT connecting thread

Mounting on single-acting rotary actuators according to VDI/VDE 3845

K_{VS} 2.0

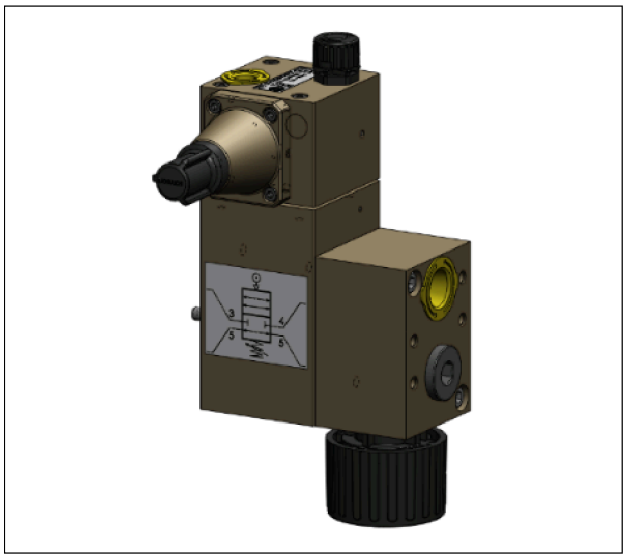

Fig. 8: *Type 3709-06 (on request)*

Pneumatic lock-up valve with booster

Input hooked up as required

G ½ or ½ NPT connecting thread

Mounting on single-acting rotary actuators according to VDI/VDE 3845

K_{VS} 4.3



Fig. 9: *Type 3709-07*

Pneumatic lock-up valve with booster

Input and output connections without thread (¼")

Mounting on single-acting rotary actuators according to VDI/VDE 3845

For mounting a solenoid valve (without volume booster) with NAMUR interface according to VDI/VDE 3845

K_{VS} 2.0



Fig. 10: *Type 3709-08 (on request)*

Pneumatic lock-up valve with booster

Input and output connections without thread (½")

Mounting on single-acting rotary actuators according to VDI/VDE 3845

For mounting a solenoid valve (without volume booster) with NAMUR interface according to VDI/VDE 3845

K_{VS} 4.3

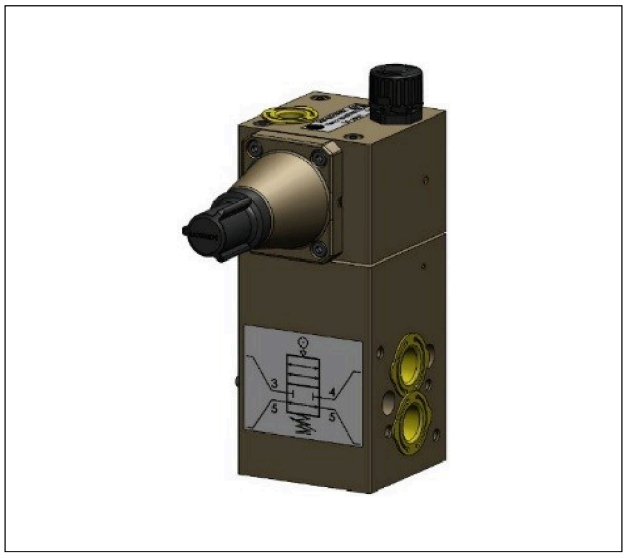

Fig. 11: *Type 3709-09 (on request)*

Pneumatic lock-up valve with booster

Input and output connections without thread (¼“)

Mounting on single-acting rotary actuators according to VDI/VDE 3845

Sandwich-style and attachment according to VDI/VDE 3845

K_{VS} 2.0



Fig. 12: *Type 3709-10 (on request)*

Pneumatic lock-up valve with booster

G ½ or ½ NPT connecting thread

Mounting on single-acting rotary actuators according to VDI/VDE 3845

Sandwich-style and attachment according to VDI/VDE 3845

K_{VS} 4.3

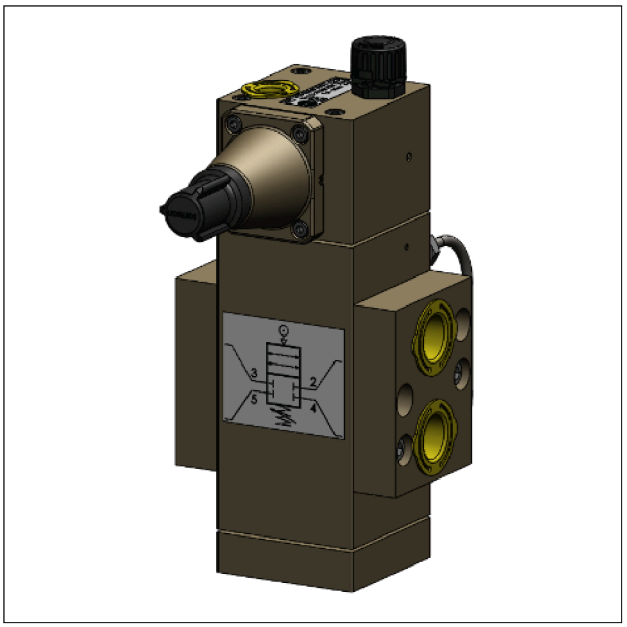

Fig. 13: *Type 3709-12*

Pneumatic lock-up valve with booster (double-acting) for installation in the signal pressure line in any position as required

G ½ or ½ NPT connecting thread

K_{VS} 4.3

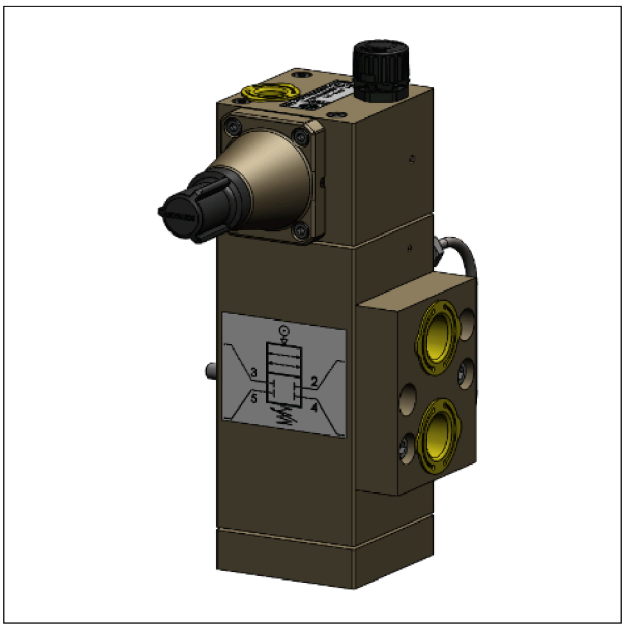

Fig. 14: *Type 3709-13*

Pneumatic lock-up valve with booster

G ½ or ½ NPT connecting thread

Attachment to double-acting rotary actuators according to VDI/VDE 3845

K_{VS} 4.3

3.4.1 Direct attachment to positioners

Pneumatic lock-up valve for direct attachment to the following positioners

- Type 3766/3767 (▶ T 8355)
- Type 3730-0 (▶ T 8384-0)
- Type 3730-3 (▶ T 8384-3)
- Type 3730-4 (▶ T 8384-4)
- Type 3730-5 (▶ T 8384-5)
- Type 3730-6 (▶ T 8384-6)
- Type 3731-3 (▶ T 8387-3)
- Type 3731-5 (▶ T 8387-5)
- TROVIS 3730-1 (▶ T 8484-1)
- TROVIS 3730-3 (▶ T 8484-3)
- TROVIS SAFE 3730-6 (▶ T 8384-6S)
- TROVIS SAFE 3731-3 (▶ T 8387-3S)

3.5 Technical data

Table 1: *Technical data for Type 3709-04 to Type 3709-13 Pneumatic Lock-up Valve*

Type 3709	-01	-02	-04	-05	-06	-07
Attachment	Positioner	Can be hooked up as required		Actuators according to VDI/VDE 3845 Input hooked up as required	Actuators according to VDI/VDE 3845 Solenoid valve only acc. to VDI/VDE 3845	
Max. supply pressure	12 bar	12 bar	6 bar	6 bar	6 bar	6 bar
Max. output pressure	6 bar	6 bar	6 bar	6 bar	6 bar	6 bar
K_{VS} coefficient	Approx. 0.2	Approx. 0.2	Approx. 4.3	Approx. 2.0	Approx. 4.3	Approx. 2.0
Set point range (continuously adjustable)	0.5 to 6 bar		1.5 to 6 bar			
Switching accuracy	Approx. 0.2 bar → For a set point of 2 bar Approx. 0.3 bar → For a set point of 4 bar Approx. 0.4 bar → For a set point of 6 bar					
Permissible ambient temperature range	-25 to +80 °C -45 to +80 °C Extended range on request		-40 to +80 °C			
Compatibility with paint	On request					
Connections						
Signal pressure output p_a	G/NPT ¼	G/NPT ¼	G/NPT ½	NAMUR ¼	NAMUR ½	NAMUR ¼
Signal pressure input p_e	G/NPT ¼	G/NPT ¼	G/NPT ½	G/NPT ¼	G/NPT ½	NAMUR ¼
Vent plug	–	–	–	G ¼	G/NPT ½	–
Supply air p_z	G/NPT ¼	G/NPT ¼	G/NPT ¼	G/NPT ¼	G/NPT ¼	G/NPT ¼
Weight (approx.)						
Aluminum	0.4 kg	0.4 kg	1.3 kg	1.9 kg	2.6 kg	1.6 kg
Stainless steel	0.4 kg	0.4 kg	3.0 kg	5.0 kg	6.1 kg	4.3 kg

Type 3709	-08	-09	-10	-12	-13
Attachment	Actuators acc. to VDI/VDE 3845 Accessories with interface according to VDI/VDE 3845		Can be hooked up as required	Actuators according to VDI/VDE 3845 Input hooked up as required	
Max. supply pressure	6 bar	6 bar	6 bar	6 bar	6 bar
Max. output pressure	6 bar	6 bar	6 bar	6 bar	6 bar
K_{VS} coefficient	Approx. 4.3	Approx. 2.0	Approx. 4.3	Approx. 4.3	Approx. 4.3
Set point range (continuously adjustable)	1.5 to 6 bar				
Switching accuracy	Approx. 0.2 bar → For a set point of 2 bar Approx. 0.3 bar → For a set point of 4 bar Approx. 0.4 bar → For a set point of 6 bar				
Permissible ambient temperature range	-40 to +80 °C				
Compatibility with paint	On request				
Connections					
Signal pressure output p_a	NAMUR ½	NAMUR ¼	NAMUR ½	G/NPT ½	NAMUR ½
Signal pressure input p_e	NAMUR ½	NAMUR ¼	NAMUR ½	G/NPT ½	G/NPT ½
Vent plug	–	–	–	–	–
Supply air p_z	G/NPT ¼	G/NPT ¼	G/NPT ¼	G/NPT ¼	G/NPT ¼
Weight (approx.)					
Aluminum	1.6 kg	1.5 kg	1.5 kg	2.3 kg	2.1 kg
Stainless steel	4.4 kg	4.0 kg	4.0 kg	5.9 kg	5.3 kg

Table 2: *Materials*

		Type 3709-01/-02		Type 3709-04/-05/-06/-07/-08/-09/-10/-12/-13	
	Version	**Aluminum**	**Stainless steel**	**Aluminum**	**Stainless steel**
Control head	Body	3.3547	1.4404	3.2315	1.4404
	Cover	3.2315	1.4404	3.2315	1.4404
	Diaphragm plate	3.1325 and 3.3547		3.2315 and 3.3547	
	Diaphragm	NBR or VMQ		VMQ	
	Plug	3.1325 and NBR or VMQ		Delrin/POM	
	Bushing	–		Delrin/POM	
	Seat	3.1325		–	
	Ball	–		1.4034	
	O-rings	NBR or VMQ		VMQ	
	Spring	1.4401		1.4401	
	Cap	PA 66		PA 66	
Booster	Body	–		3.2315	1.4404
	Booster section			POM, VMQ and stainless steel	
	Intermediate piece			1.0338	
	Diaphragm			VMQ	
	O-rings			VMQ	

3.6 Accessories

Accessories	**Order no.**
Vent plug G ¼[1)], polyamide, degree of protection IP54	1992-3966
Vent plug G ¼, polycarbonate (PC), degree of protection IP54	1992-3413
Vent plug ½ NPT, polycarbonate (PC), degree of protection IP54	1992-3414

1) Also fits NPT connections

3.7 Dimensions in mm

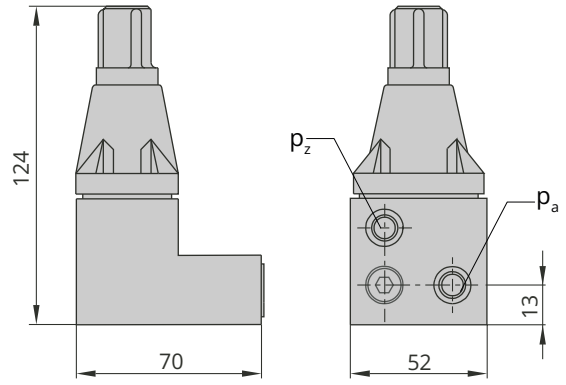

Fig. 15: *Type 3709-01*

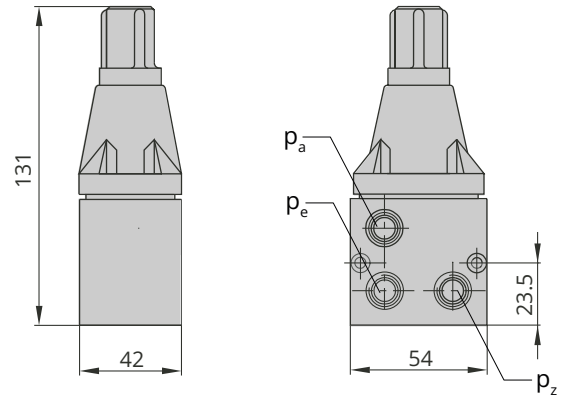

Fig. 16: *Type 3709-02*

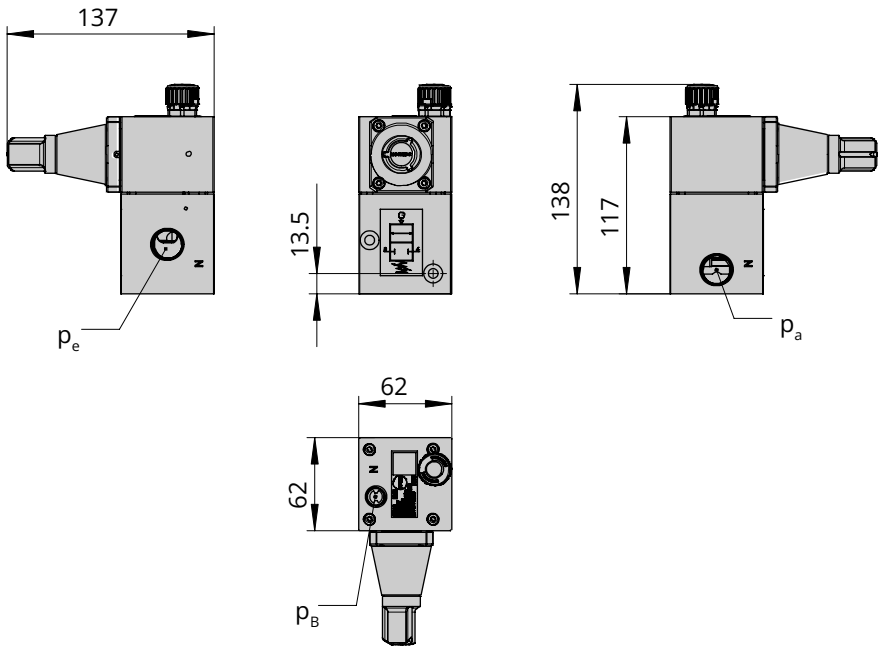

Fig. 17: *Type 3709-04*

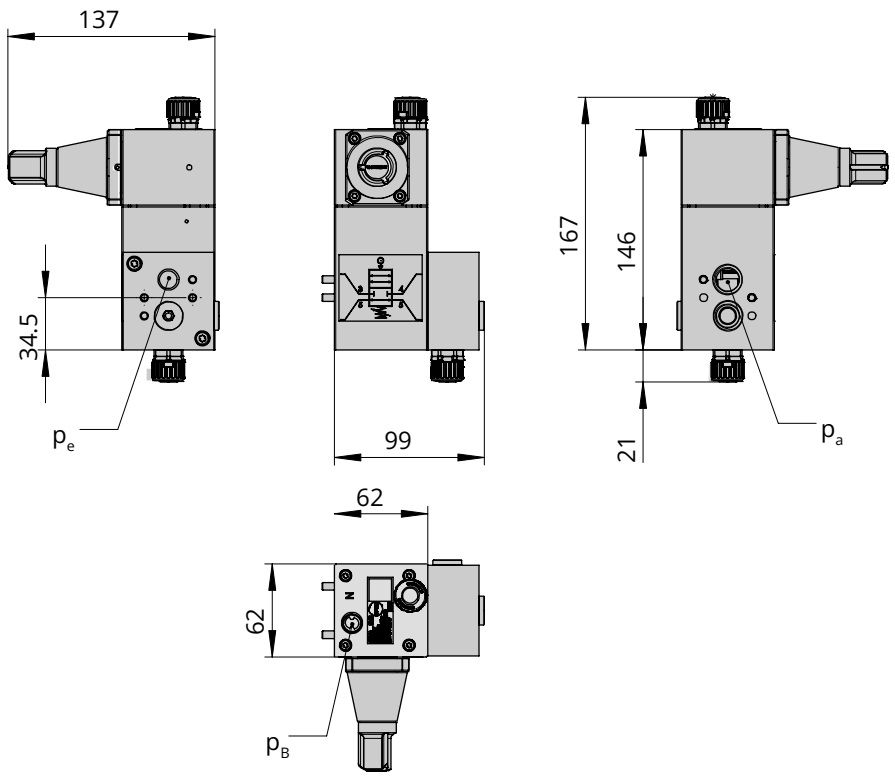

Fig. 18: *Type 3709-05*

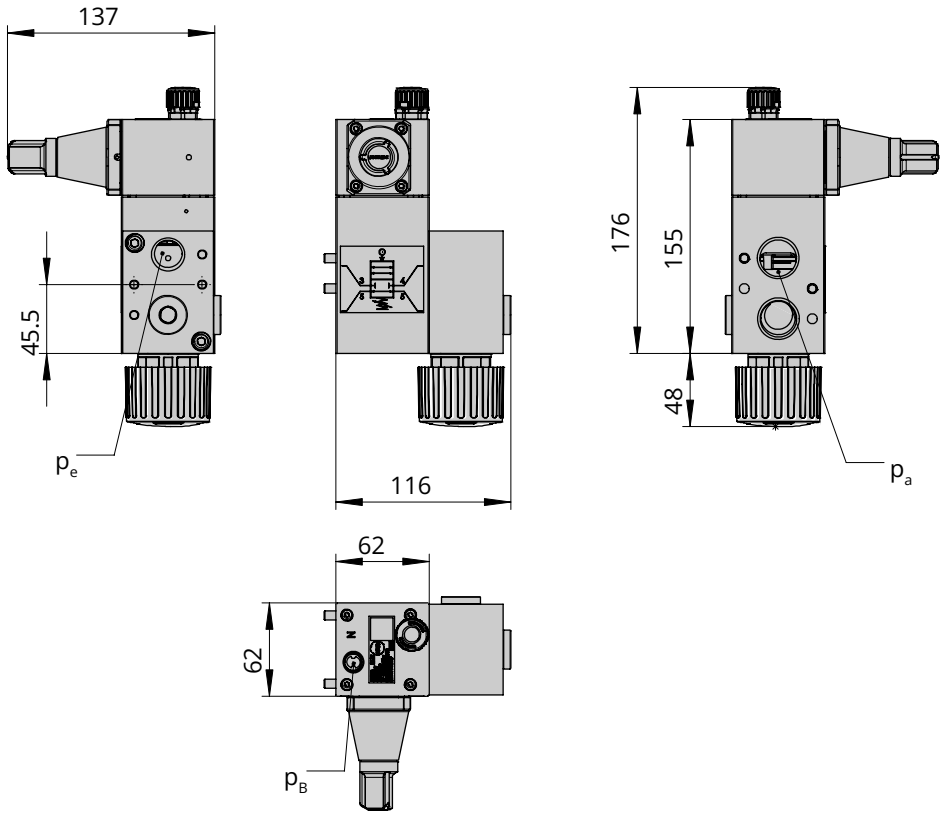

Fig. 19: *Type 3709-06*

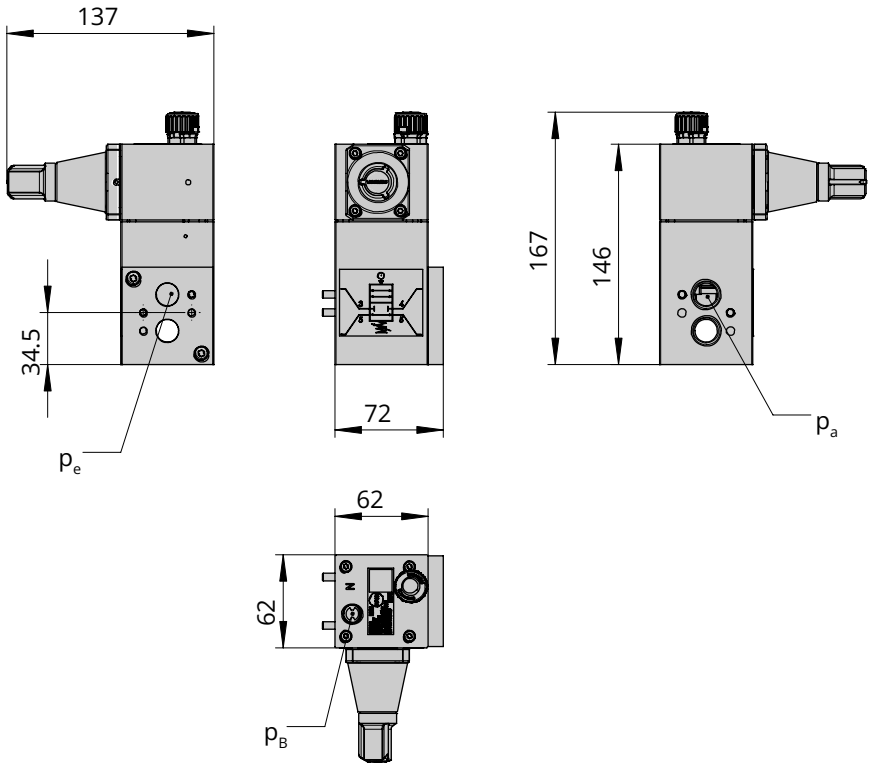

Fig. 20: *Type 3709-07*

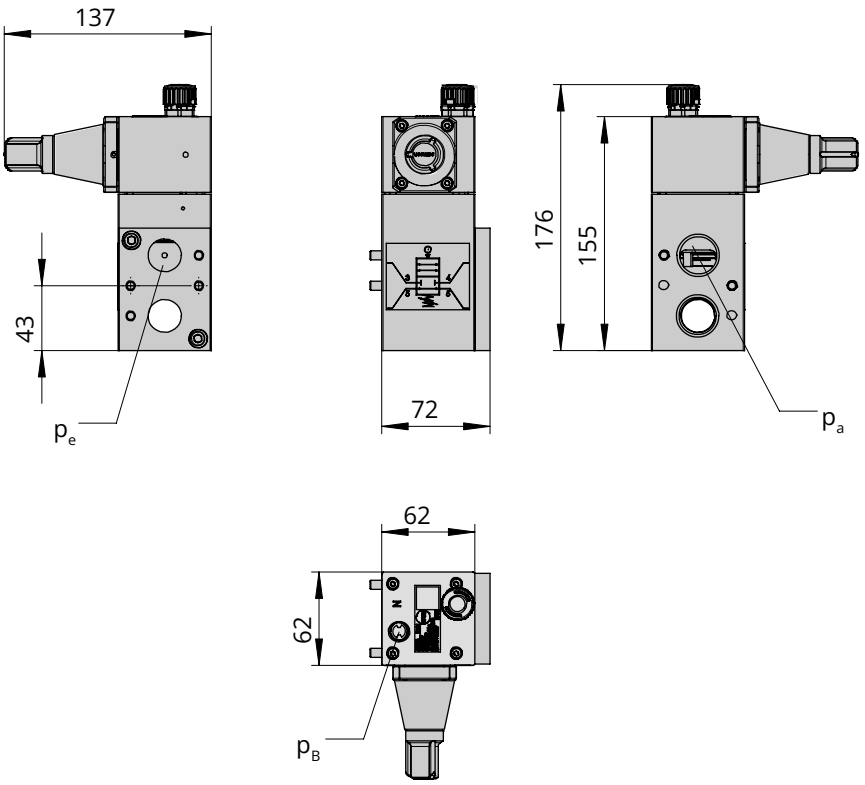

Fig. 21: *Type 3709-08*

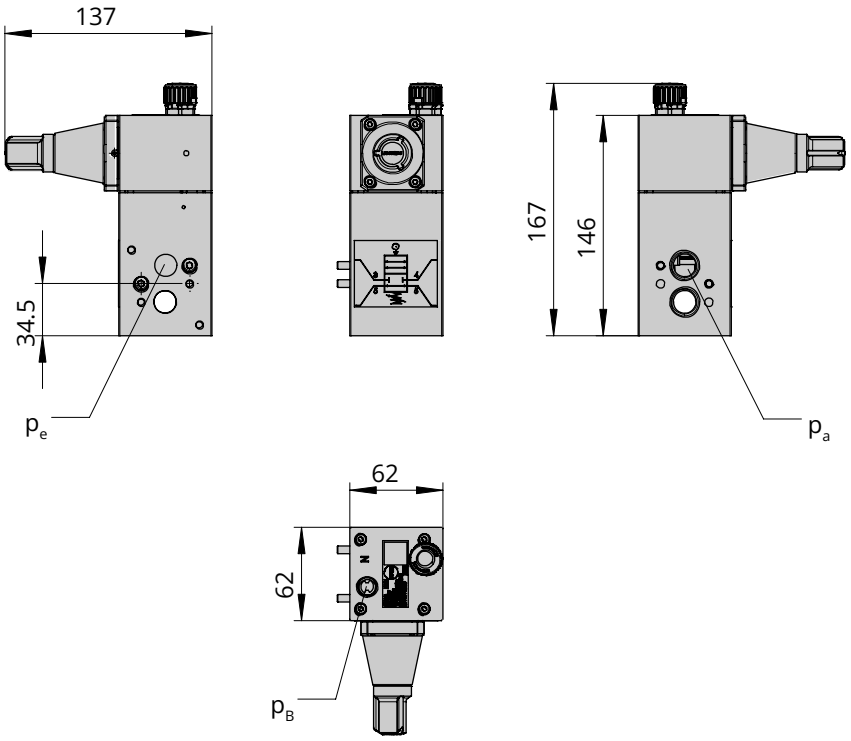

Fig. 22: *Type 3709-09*

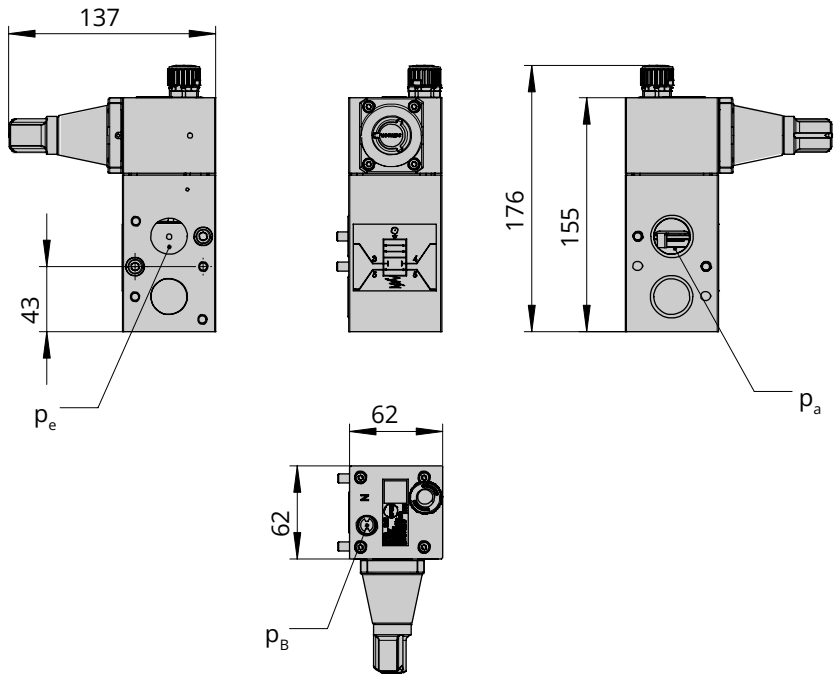

Fig. 23: *Type 3709-10*

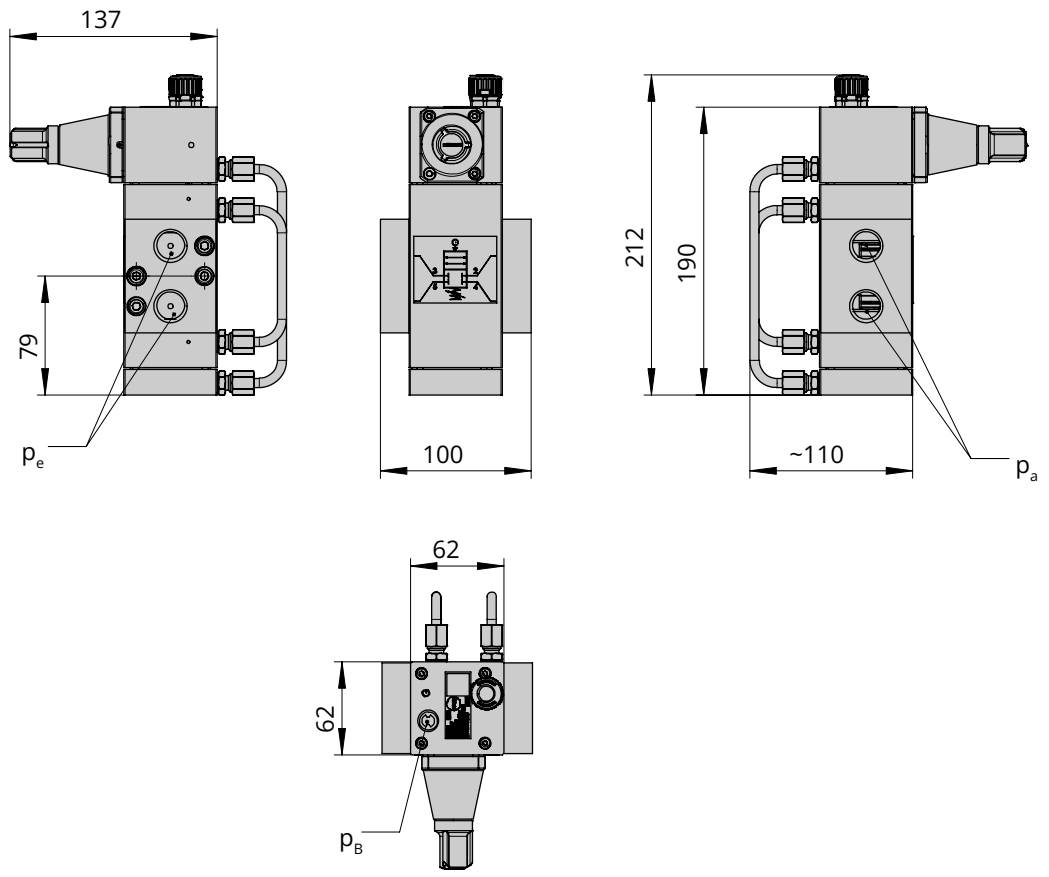

Fig. 24: *Type 3709-12*

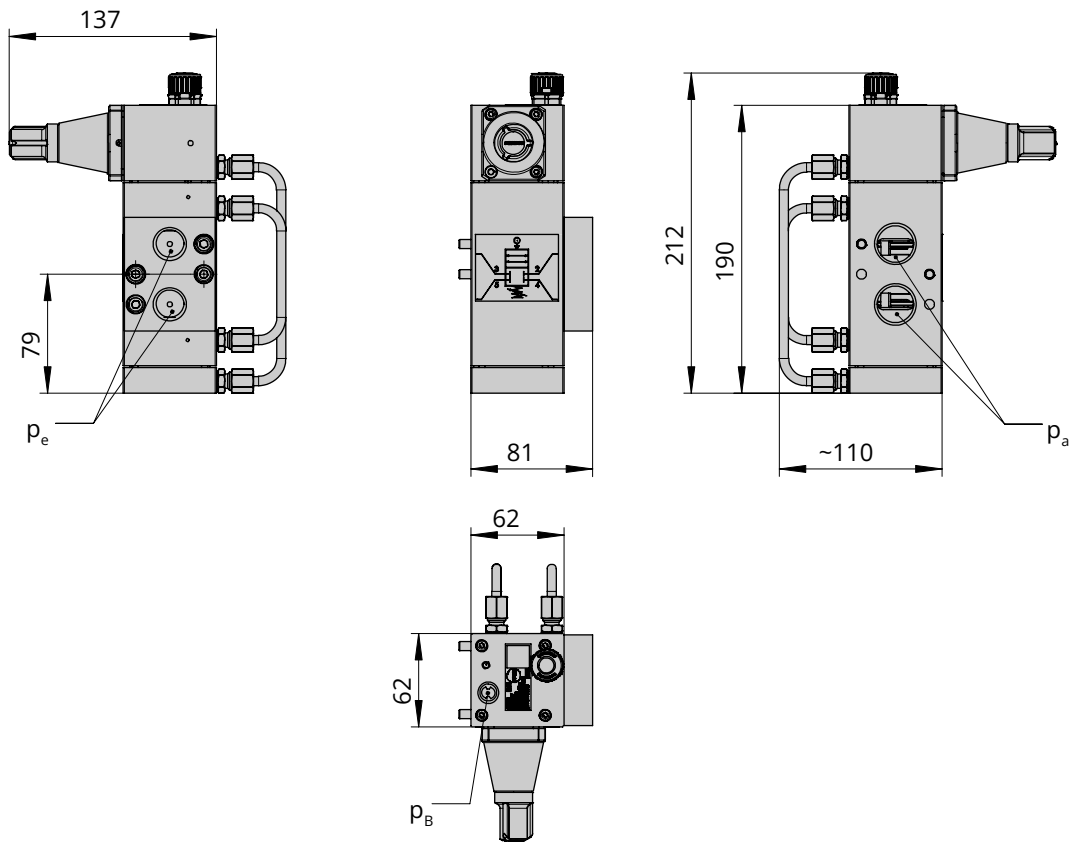

Fig. 25: *Type 3709-13*

p_a	Output
p_e	Input
p_z	Supply air

4 Shipment and on-site transport

The work described in this chapter is to be performed only by personnel appropriately qualified to carry out such tasks.

4.1 Accepting the delivered goods

After receiving the shipment, proceed as follows:

1. Compare the shipment received with the delivery note.
2. Check the shipment for transportation damage. Report any damage to SAMSON and the forwarding agent (refer to delivery note).

4.2 Removing the packaging from the pneumatic lock-up valve

NOTICE

Risk of damage to the pneumatic lock-up valve through foreign particles entering it.

⇨ *Do not remove the protective caps until immediately before mounting.*

⇨ *Do not remove the packaging if the pneumatic lock-up valve is to be transported to another location or kept in storage.*

Before mounting the pneumatic lock-up valve, proceed as follows:

1. Remove the packaging from the pneumatic lock-up valve.
2. Dispose and recycle the packaging in accordance with the local regulations.

4.3 Transporting the pneumatic lock-up valve

⇨ Pack the pneumatic lock-up valve properly to comply with terms of transportation.

Transport instructions

– Protect the pneumatic lock-up valve against external influences (e.g. impact).
– Protect the pneumatic lock-up valve against moisture and dirt.
– Observe the transportation temperature specified in the technical data (see Chapter 3.5). If no permissible transportation temperature is specified, the permissible ambient temperature also applies as the transportation temperature.

4.4 Storing the pneumatic lock-up valve

NOTICE

Risk of damage to the pneumatic lock-up valve due to incorrect storage.

⇨ *Observe the storage instructions.*

⇨ *Avoid longer storage periods.*

⇨ *Contact SAMSON in case of different storage conditions or longer storage times.*

Storage instructions

– Protect the pneumatic lock-up valve against external influences (e.g. impact, shocks, vibration).
– Do not damage the corrosion protection (coating).
– Protect the pneumatic lock-up valve against moisture and dirt. In damp spaces, prevent condensation. If necessary, use a drying agent or heating.
– Make sure that the ambient air is free of acids or other corrosive media.
– Observe the storage temperature specified in the technical data (see Chapter 3.5). If no permissible storage temperature is specified, the permissible ambient temperature also applies as the storage temperature.
– Pack the pneumatic lock-up valve in airtight packaging.

5 Installation

The work described in this chapter is to be performed only by personnel appropriately qualified to carry out such tasks.

⚠ WARNING

Risk of injury due to high pressure inside device.

The pneumatic lock-up valve is pressurized. Improper removal of the installed pneumatic lock-up valve or opening of the body can lead to device components bursting and cause serious injury.

⇨ *Disconnect the signal pressure before removing an installed pneumatic lock-up valve or opening the valve body.*

⚠ WARNING

Risk of damage to hearing due to loud noise.

Without a noise-reducing element screwed into the exhaust port, the pneumatic lock-up valve generates a loud noise on venting.

⇨ *Wear hearing protection.*

❗ *NOTICE*

Risk of malfunction due to the incorrect mounting of the pneumatic lock-up valve.

The proper shut-off of the signal pressure line is only guaranteed by the pneumatic lock-up valve when it is mounted properly.

⇨ *Mount the pneumatic lock-up valve as close to the actuator as possible.*

5.1 Installation conditions

Work position

The work position for the pneumatic lock-up valve is the front view looking onto the adjustment screw and lock nut of the device seen from the position of operating personnel.

Plant operators must ensure that, after installation of the pneumatic lock-up valve, the operating personnel can perform all necessary work safely and easily access the device from the work position.

Mounting position

1. Mount the pneumatic lock-up valve as close to the pneumatic actuator as possible.
2. Mount the pneumatic lock-up valve between the positioner or solenoid valve and the pneumatic actuator.

5.2 Preparation for installation

Before installation, make sure that the following conditions are met:

– The pneumatic lock-up valve is not damaged.
– The air supply is not yet connected to the pneumatic lock-up valve.
– While installing the pneumatic lock-up valve, precautions are taken to prevent the medium from entering the device.

Proceed as follows:

1. Lay out the necessary material and tools to have them ready during installation work.
2. Remove the protective caps from the pneumatic connections.

5.3 Mounting the pneumatic lock-up valve

5.3.1 Mounting onto Type 3730 or TROVIS 3730 Positioner (mounting version since 2019)

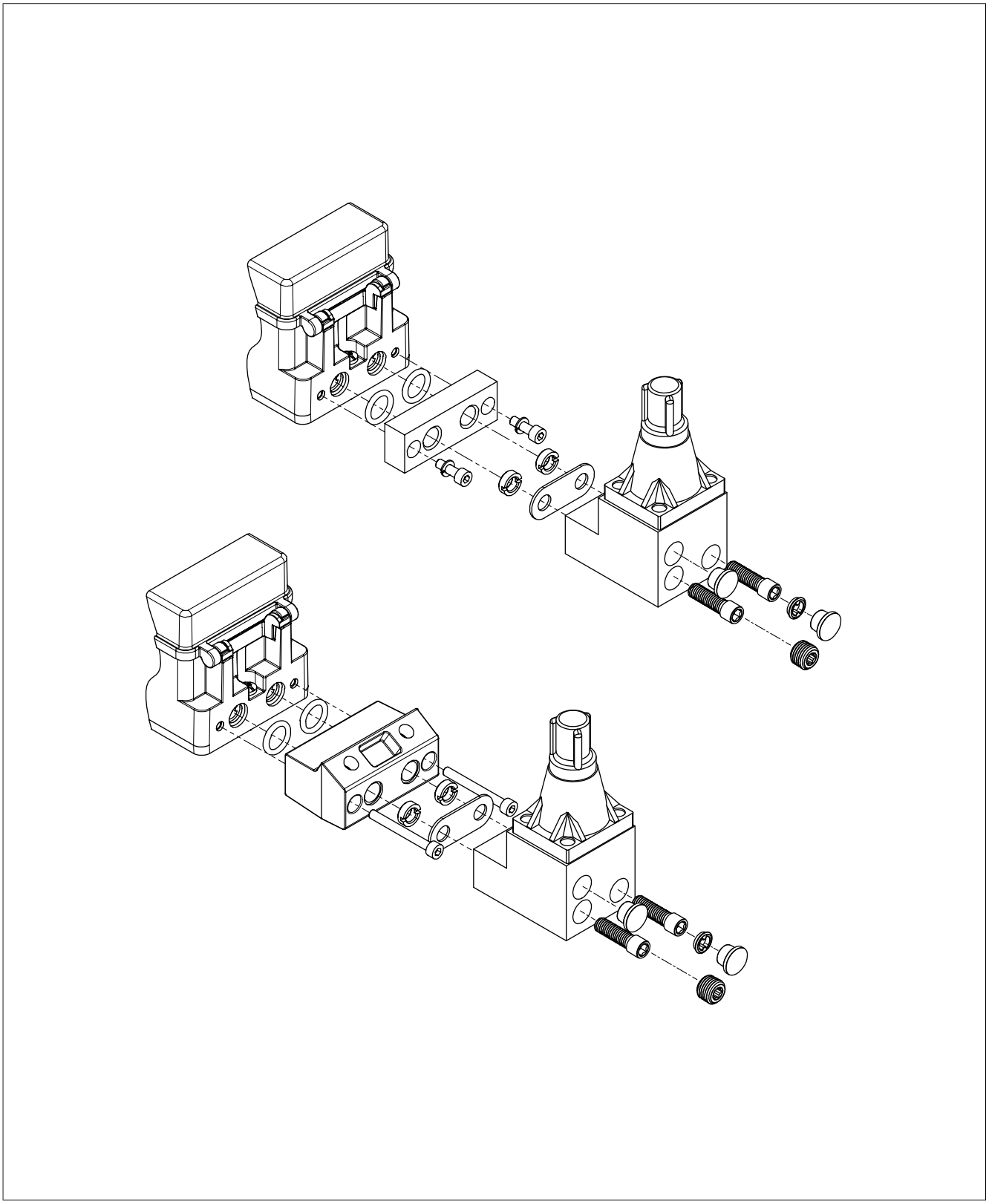

5.3.2 Mounting onto Type 3730 or TROVIS 3730 Positioner (mounting version before 2019)

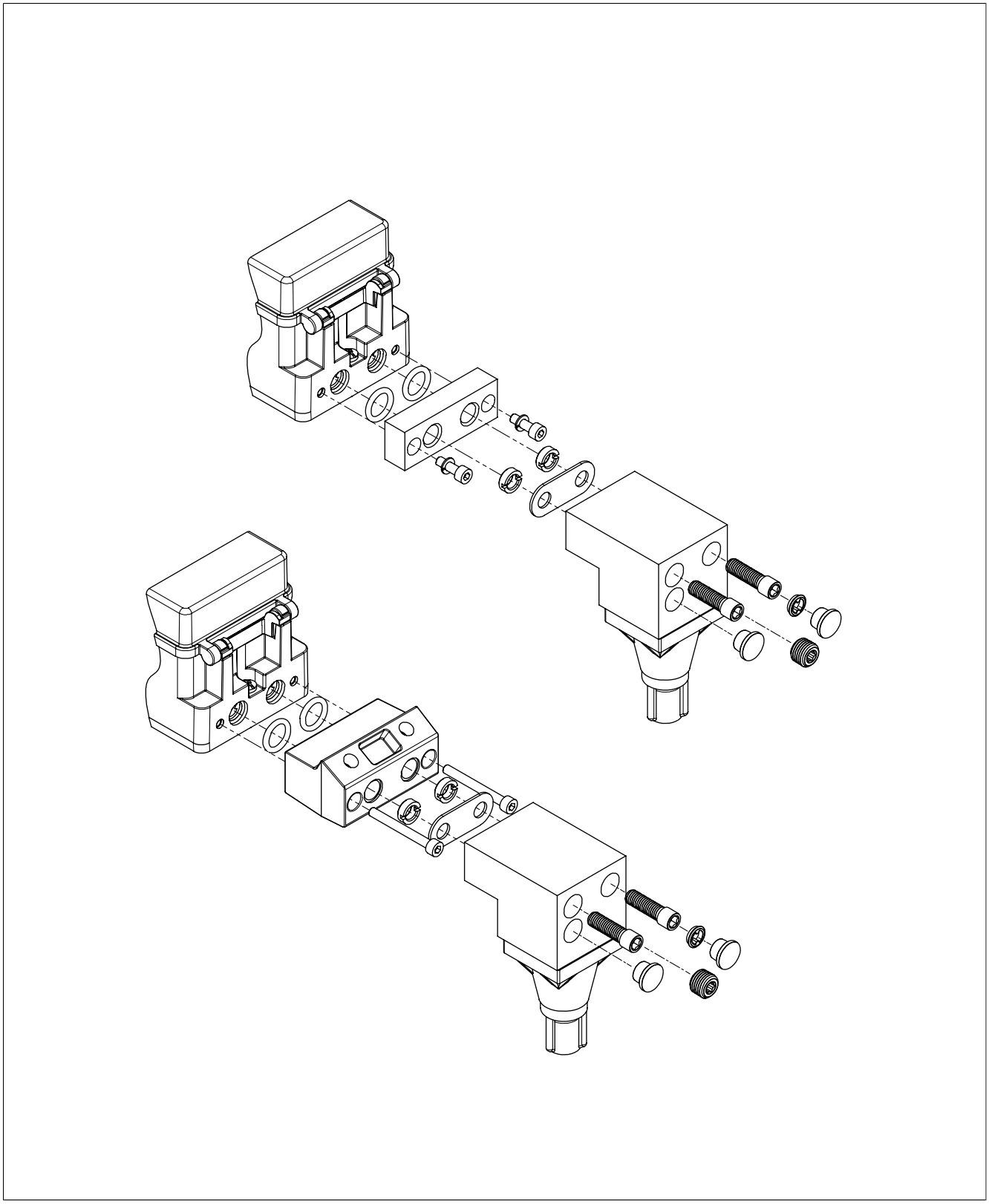

5.3.3 Mounting onto a Type SRP 1200 Rotary Actuator

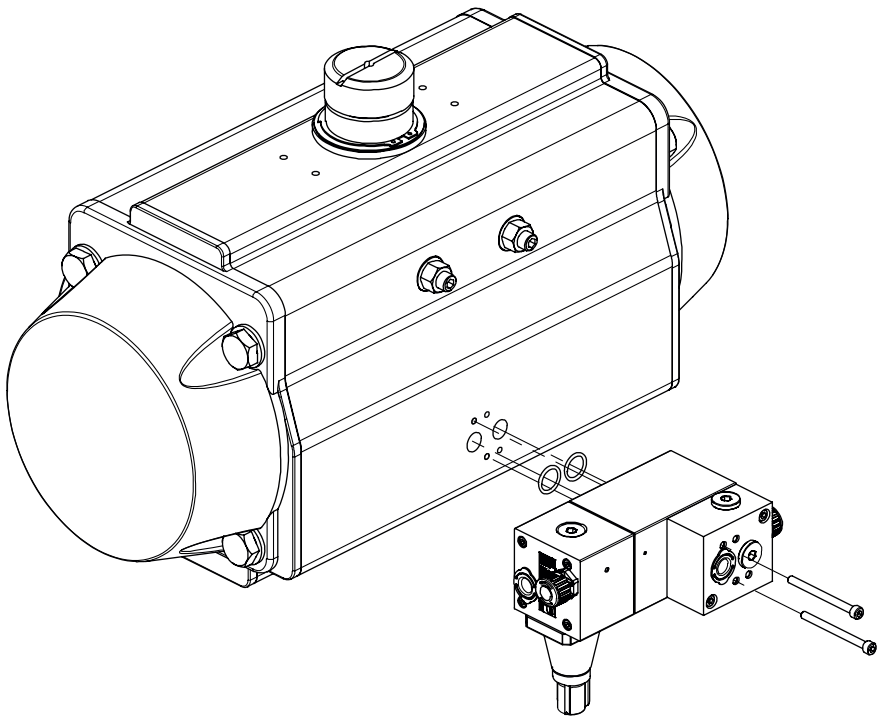

5.3.4 NAMUR attachment between solenoid valve and rotary actuator (sandwich style)

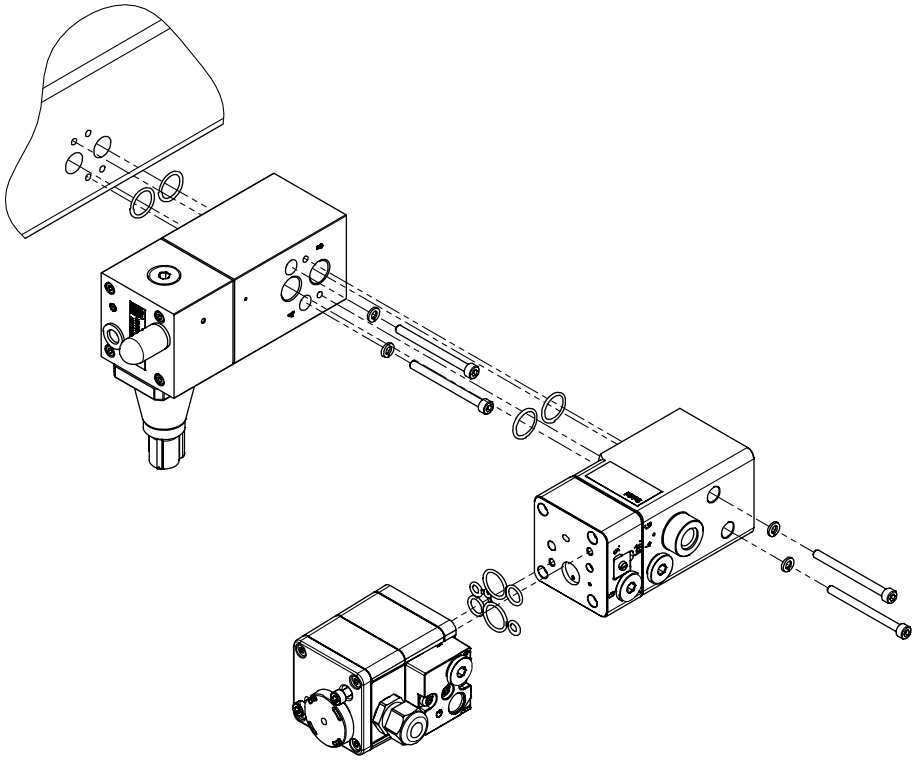

5.4 Pneumatic connections

The connections of the pneumatic lock-up valve are designed with either G or NPT threads depending on the version. The labeling of the pneumatic connections depends on the version:

Table 3: *Type 3709-01/-02*

Connection	Inscription	Short form
Supply air	Supp.	p_z
Input	Input	p_e
Output	Output	p_a

Table 4: *Type 3709-04*

Connection	Inscription	Short form
Supply air	G	p_z
Input	4	p_e
Output	3	p_a

Table 5: *Type 3709-05/-06/-07/-08/-9/-10/-12/-13*

Connection	Inscription	Short form
Supply air	G	p_z
Input	4	p_e
Output	3	p_a
Venting from the actuator	5	–

The following generally applies to the screw fittings:

⇨ Before installation, all pipes must be free of dirt and foreign matter.

⇨ Mount the screw fittings properly using suitable tools and sealant to prevent thread galling (seizure).

NOTICE

The use of PTFE tape to seal leaks on fittings is not permitted.

⇨ *Only apply thread lubricant or thread sealant to the thread.*

⇨ Tighten all screw fittings securely.

6 Start-up

The work described in this chapter is to be performed only by personnel appropriately qualified to carry out such tasks.

⚠ WARNING

Risk of injury due to high pressure inside device.

The pneumatic lock-up valve is pressurized. Improper removal of the installed pneumatic lock-up valve or opening of the body can lead to device components bursting and cause serious injury.

⇨ *Disconnect the signal pressure before removing an installed pneumatic lock-up valve or opening the valve body.*

⚠ WARNING

Risk of damage to hearing due to loud noise.

Without a noise-reducing element screwed into the exhaust port, the pneumatic lock-up valve generates a loud noise on venting.

⇨ *Wear hearing protection.*

1. Mount the pneumatic lock-up valve as described in Chapter 5.3.
2. Connect and apply supply air to the pneumatic lock-up valve.
3. Finely tune the dynamic response as described in Chapter 6.1.

6.1 Fine-tuning

The procedure described below is based on a pneumatic lock-up valve mounted on a fail-close pneumatic actuator.

1. Connect an ammeter to the positioner according to the terminal assignment (see the associated positioner's mounting and operating instructions).
2. Connect a supply air that can be regulated to the pneumatic lock-up valve and positioner.
3. Unscrew the cap from the pneumatic lock-up valve.
4. Undo the lock nut at the adjustment screw for fine tuning.
5. Turn the adjustment screw counterclockwise until no resistance can be felt at the screw. Make sure that the screw is not unscrewed too far. It is not secured against falling out.
6. Adjust the supply pressure to the following value: Upper pressure range value of the pneumatic actuator +0.2 bar
7. Set the lowest control signal (4 mA) at the ammeter and apply it to the positioner.
8. Fully vent the pneumatic actuator to move the valve to the fail-position.
9. Turn the adjustment screw clockwise as far as it will go.
   This causes the pneumatic lock-up valve to shut off the signal pressure line. As a result, the pneumatic actuator remains in its last position.
10. Set the highest control signal (20 mA) at the ammeter and apply it to the positioner.
11. Slowly turn the adjustment screw of the pneumatic lock-up valve counterclockwise until the actuator stem starts to move. Turn the adjustment screw back a half turn at this point until the actuator stem stops moving.
    The switching point of the pneumatic lock-up valve is now adjusted.
12. Check adjustment: Reduce the supply pressure by 0.5 bar. Adjust the control signal through its range from 4 to 20 mA.
    The setting is correct when the stem does not move.
13. Raise the supply pressure again by 0.5 bar. Adjust the control signal through its range from 4 to 20 mA.
    The setting is correct when the stem moves.
14. Tighten the lock nut at the adjustment screw of the pneumatic lock-up valve.
15. Screw on the cap.

7 Malfunctions

The work described in this chapter is to be performed only by personnel appropriately qualified to carry out such tasks.

⚠ WARNING

Risk of injury due to high pressure inside device.

The pneumatic lock-up valve is pressurized. Improper removal of the installed pneumatic lock-up valve or opening of the body can lead to device components bursting and cause serious injury.

⇨ *Disconnect the signal pressure before removing an installed pneumatic lock-up valve or opening the valve body.*

⚠ WARNING

Risk of damage to hearing due to loud noise.

Without a noise-reducing element screwed into the exhaust port, the pneumatic lock-up valve generates a loud noise on venting.

⇨ *Wear hearing protection.*

NOTICE

Risk of damage to the pneumatic lock-up valve due to contamination.

Improper handling may allow dirt or other foreign particles to enter the device and lead to malfunctioning or damage.

⇨ *Protect the pneumatic lock-up valve against dirt particles entering it during mounting, transport or storage.*

7.1 Troubleshooting

Malfunction	Possible reasons	Recommended action
Leakage between pneumatic lock-up valve and air connections	Screw fittings are loose.	Check whether the screw fitting leaks and are screwed on properly.

8 Servicing

The work described in this chapter is to be performed only by personnel appropriately qualified to carry out such tasks.

⚠ WARNING

Risk of injury due to high pressure inside device.

The pneumatic lock-up valve is pressurized. Improper removal of the installed pneumatic lock-up valve or opening of the body can lead to device components bursting and cause serious injury.

⇨ *Disconnect the signal pressure before removing an installed pneumatic lock-up valve or opening the valve body.*

⚠ WARNING

Risk of damage to hearing due to loud noise.

Without a noise-reducing element screwed into the exhaust port, the pneumatic lock-up valve generates a loud noise on venting.

⇨ *Wear hearing protection.*

NOTICE

Risk of damage to the pneumatic lock-up valve due to contamination.

Improper handling may allow dirt or other foreign particles to enter the device and lead to malfunctioning or damage.

⇨ *Protect the pneumatic lock-up valve against dirt particles entering it during mounting, transport or storage.*

The pneumatic lock-up valve was checked by SAMSON before it left the factory.

- The product warranty becomes void if service or repair work not described in these instructions is performed without prior agreement by SAMSON's After-sales Service.
- Only use original spare parts by SAMSON, which comply with the original specifications.

8.1 Periodic inspection and testing of the pneumatic lock-up valve

SAMSON recommends inspection and testing according to Table 6 at the minimum.

Table 6: *Recommended inspection and testing*

Inspection and testing	Action to be taken in the event of a negative result
Check the markings, labels and nameplates on the positioner for their readability and completeness.	Contact SAMSON when nameplates or labels are damaged, missing or incorrect to renew them.
	Clean any inscriptions that are covered with dirt and are illegible.
Check the pneumatic lock-up valve to ensure it is mounted firmly.	Tighten the any loose mounting screws.
Check the pneumatic connections.	Tighten any loose male connectors of the screw fittings.
	Renew any air pipes or hoses that leak.

9 Decommissioning

The work described in this chapter is to be performed only by personnel appropriately qualified to carry out such tasks.

⚠ WARNING

Risk of injury due to high pressure inside device.

The pneumatic lock-up valve is pressurized. Improper removal of the installed pneumatic lock-up valve or opening of the body can lead to device components bursting and cause serious injury.

⇨ *Disconnect the signal pressure before removing an installed pneumatic lock-up valve or opening the valve body.*

⚠ WARNING

Risk of damage to hearing due to loud noise.

Without a noise-reducing element screwed into the exhaust port, the pneumatic lock-up valve generates a loud noise on venting.

⇨ *Wear hearing protection.*

NOTICE

Interrupting closed-loop control will disturb the process.

Decommissioning the pneumatic lock-up valve causes the actuator (and the valve) to remain in its last position.

⇨ *Do not put the pneumatic lock-up valve out of operation while the process is running.*

⇨ Disconnect and lock the air supply and signal pressure.

10 Removal

The work described in this chapter is to be performed only by personnel appropriately qualified to carry out such tasks.

⚠ WARNING

Risk of injury due to high pressure inside device.

The pneumatic lock-up valve is pressurized. Improper removal of the installed pneumatic lock-up valve or opening of the body can lead to device components bursting and cause serious injury.

⇨ *Disconnect the signal pressure before removing an installed pneumatic lock-up valve or opening the valve body.*

⚠ WARNING

Risk of damage to hearing due to loud noise.

Without a noise-reducing element screwed into the exhaust port, the pneumatic lock-up valve generates a loud noise on venting.

⇨ *Wear hearing protection.*

⚠ WARNING

Sudden loud noise when the pneumatic actuator vents.

Removing the pneumatic lock-up valve causes the pneumatic actuator to vent. A loud noise may occur during venting. This can cause hearing damage.

⇨ *Wear hearing protection when working near the valve.*

1. Put the pneumatic lock-up valve out of operation (see Chapter 9).
2. Disconnect the lines for supply air and signal pressure.
   This causes the pneumatic actuator to vent. The valve moves to its fail-safe position as a result.
3. To remove the pneumatic lock-up valve, loosen the fastening screws.

11 Repair

11.1 Returning devices to SAMSON

Defective devices can be returned to SAMSON for repair.

Proceed as follows to return devices:

1. Exceptions apply concerning some special device models ▶ www.samsongroup.com > Service > After-sales Service > Returning goods.
2. Register the return shipment and include the following information by e-mail returns-de@samsongroup.com:
   - Type
   - Article no.
   - Configuration ID
   - Original order
   - Completed Declaration on Contamination, which can be downloaded from the Internet at: ▶ www.samsongroup.com > Service > After-sales Service > Returning goods

   After checking your registration, we will send you a return merchandise authorization (RMA).
3. Attach the RMA (together with the Declaration on Decontamination) to the outside of your shipment so that the documents are clearly visible.
4. Send the shipment to the address given on the RMA.

i *Note*

Further information on returned devices and how they are handled can be found at:

▶ *www.samsongroup.com > Service > After-sales Service*

12 Disposal



SAMSON is a producer registered in Europe, agency in charge
▶ www.samsongroup.com > About SAMSON > Environment, Social & Governance > Material Compliance > Waste electrical and electronic equipment (WEEE)
WEEE reg. no.: DE 62194439

Information on substances listed as substances of very high concern (SVHC) on the candidate list of the REACH regulation can be found in the document “Additional Information on Your Inquiry/Order”, which is added to the order documents, if applicable. This document includes the SCIP number assigned to the devices concerned. This number can be entered into the database on the European Chemicals Agency (ECHA) website (▶ https://www.echa.europa.eu/scip-database) to find out more information on the SVHC contained in the device.

Note

SAMSON can provide you with a recycling passport on request. Simply e-mail us at aftersales-fr@samsongroup.com giving details of your company address.

Tip

On request, SAMSON can appoint a service provider to dismantle and recycle the product as part of a distributor take-back scheme.

⇨ Observe local, national and international refuse regulations.

⇨ Do not dispose of components, lubricants and hazardous substances together with your other household waste.

13 Appendix

13.1 After-sales service

Contact our after-sales service for support concerning service or repair work or when malfunctions or defects arise.

E-mail contact

You can reach our after-sales service at the following e-mail address:

▶ aftersalesservice@samsongroup.com

Addresses of SAMSON AG and its subsidiaries

The addresses of SAMSON AG, its subsidiaries, representatives and service facilities worldwide can be found on our website (▶ www.samsongroup.com) or in all product catalogs.

Required specifications

Please submit the following details:

- Order number and position number in the order
- Type designation
- Model number
- Configuration ID
- Material number
- Serial number
- Firmware version
- Production number
- Device version

13.2 Spare parts

Spare part	Order no.
Cap, plastic (PA66)	0079-0023
Cap, stainless steel (1.4404)	0079-0118
O-ring 16x2, -45 to +80 °C (for NAMUR interface ¼)	8421-0368
O-ring 24x2, -20 to +80 °C (for NAMUR interface ½)	8421-9146
Blanking plug G ¼, 1.4571	0070-0858
Blanking plug ¼ NPT, 1.4571	0070-0862
O-ring 14x1.5 made of silicone rubber (VMQ) (for blanking plug ¼")	8421-9103
Blanking plug G ½, 1.4571	0070-0873
Blanking plug ½ NPT, 1.4571	0070-0874
O-ring 21x1.5 made of silicone rubber (VMQ) (for blanking plug ½")	8421-9176
Pipe (small) for double-acting version (Type 3709-12/-13)	0409-0810
Pipe (large) for double-acting version (Type 3709-12/-13)	0409-0811
Pipe mounting	8582-0145

SAMSON AKTIENGESELLSCHAFT
Weismüllerstraße 3 · 60314 Frankfurt am Main, Germany
Phone: +49 69 4009-0 · Fax: +49 69 4009-1507
samson@samsongroup.com · www.samsongroup.com

2026-10-12 | English | 4000300189 | 1.3