DATA SHEET

T 3701 EN

Type 3701 Solenoid Valve

Application

Solenoid valve for controlling pneumatic linear actuators with NAMUR rib according to IEC 60534 or pneumatic rotary actuators with NAMUR interface according to VDI/VDE 3845

Intrinsically safe, low-power binary signals issued by automation equipment or fieldbus systems can be used for controlling purposes.

Special features

- High level of operational reliability due to the flapper/nozzle assembly and booster valve with a diaphragm actuator
- Standard version for nominal signals 12 or 24 V DC, 115 or 230 V AC
- Type of protection: intrinsic safety Ⓔx II 2G Ex ia IIC T6
- Non-sparking Ⓔx II 3G Ex nA II T6 according to ATEX
- Nominal signals 6, 12 or 24 V DC for CSA and FM
- Power consumption from 13 to 27 mW or 0.17 to 0.46 VA (depending on nominal signal)
- Electrical connection using M20x1.5 cable gland or with optional connector
- Corrosion-resistant enclosure with degree of protection IP 54 or IP 65
- Version compatible with paint or free of silicone on request
- Pilot supply 1.4 to 6 bar
- Service life: more than 20 million switching cycles
- Ambient temperature −45 to +80 °C, depending on type of protection, temperature class and seals
- EC type examination performed by TÜV Rheinland for safety-related systems according to DIN 3394 Part 1, DIN EN 161, DIN 32725 and optionally according to DIN 32730
- Use with safety shut-off valves, certification for safety-instrumented systems according to IEC 61508 (SIL), optional
- Cable break protection (accessories)

Versions

– 3/2-way or 5/2-way solenoid valve with K_{VS} = 0.25

– Special switching functions on request

Fig. 1: *Type 3701 Solenoid Valve*

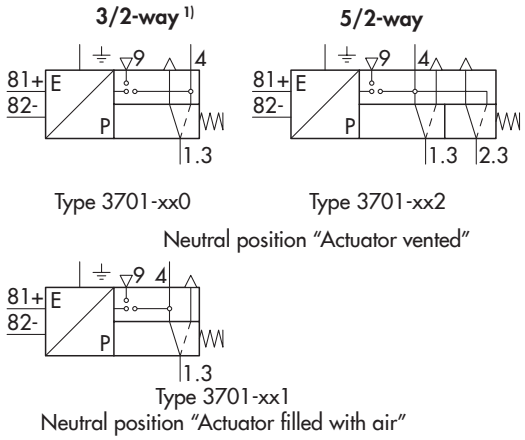

1) Version for rotary actuators with an internal exhaust air feedback

Fig. 2: *Logic symbols for 3/2-way and 5/2-way solenoid valves*

– The actuator can be vented or alternatively filled with air in the neutral position of the 3/2-way solenoid valve

– Attachment to linear actuators with NAMUR rib or rod-type yoke as well as to rotary actuators with NAMUR interface

– Interfaces for special attachment on request

Table 1: *Technical data of Type 3701 Solenoid Valve*

General data		
Design		Solenoid with flapper/nozzle assembly and diaphragm switching elements
Degree of protection		IP 54 with filter · IP 65 with filter check valve
Compliance		CE · EAC
Material	Enclosure	AlMg, powder coated, gray beige RAL 1019
	NAMUR adapter plate	AlMg, powder coated, gray beige RAL 1019
	Screws	1.4571
	Springs	1.4310
	Seals	Silicone rubber, Perbunan
	Diaphragms	Chloroprene rubber 57 Cr 868 (–20 to +80 °C) · Silicone rubber (–45 to +80 °C)
Ambient temperature		See Electric data
Mounting position		Any desired position
Weight		Approx. 450 g

Electric data						
Nominal signal		U_n	**12 V DC**	**24 V DC**	**115 V AC**	**230 V AC**
		U_{max}	25 V	32 V	130 V	255 V
		f	–		48 to 62 Hz	
Switching point	On	$U_{80\,°C}$	≥9.6 V	≥18 V	≥82 to 130 V	≥183 to 255 V
		$I_{20\,°C}$	≥1.52 mA	≥1.57 mA	≥2.2 mA	≥2.6 mA
		$P_{20\,°C}$	≥13.05 mW	≥26.71 mW	≥0.17 VA	≥0.46 VA
	$Off_{-25\,°C}$	U	≤2.4 V	≤4.7 V	≤18 V	≤36 V
Input impedance		R	5.5 kΩ	10.7 kΩ	Approx. 40 kΩ	Approx. 80 kΩ
Temperature influence			0.2 %/K	0.1 %/K	0.05 %/K	0.03 %/K
Type of protection [1]			Intrinsic safety II 2G Ex ia IIC T6 Non-sparking II 3G Ex nA II T6		No explosion protection	
Output voltage [2]		U_i (V)	25 · 27 · 28 · 30 · 32		–	
Output current [2]		I_i (mA)	150 · 125 · 115 · 100 · 85		–	
Power dissipation		P_i (mW)	No restrictions		–	
Outer inductance [2]		L_i	Negligibly small		–	
Outer capacitance [2]		C_i	Negligibly small		–	
Ambient temperature [7]			–45 to +60 °C (temperature class T6) –45 to +70 °C (temperature class T5) –45 to +80 °C (temperature class T4)		–	
Connection			See article code on page 4			

Pneumatic data			
Type 3701		**-xx0 / -xx1**	**-xx2**
Safety function		TÜV [3]/SIL [3]	–
Version		3/2-way function	5/2-way function
K_{VS} coefficient [4]		0.25	0.25
Pilot supply	Medium	Instrument air, free from corrosive substances and nitrogen	
	Pressure	1.4 to 6 bar	
Operating medium		Instrument air, free from corrosive substances [5] · Air containing oil, nitrogen, non-corrosive gases [6]	
Operating pressure		Max. 6 bar	
Output signal		Operating pressure	
Air consumption		≤80 l_n/h at 1.4 bar pilot supply in neutral position ≤10 l_n/h at 1.4 bar pilot supply in operating position	
Switching time [7]		≤65 ms	
Service life		≥2 x 10^7 switching cycles (at –20 to +80 °C) ≥2 x 10^6 switching cycles (at –45 to +80 °C)	
Connection		G ¼ (¼ NPT)	

1) EC type examination certificate PTB 01 ATEX 2178 and statement of conformity PTB 02 ATEX 2014 X
2) Permissible maximum values when connected to a certified intrinsically safe circuit.
3) Report no. S 384 2013 E2 (used on control valves according to DIN 3394 Part 1, DIN EN 161, DIN 32725, DIN EN 264 and DIN 32730);
Report no. V 60.09/14 rev. 01 (certification for safety-instrumented systems according to IEC 61508/SIL).
4) The air flow rate when p_1 = 2.4 bar and p_2 = 1.0 can be calculated using the following formula: Q = K_{VS} x 36.22 in m^3/h.
5) With internal air supply (delivered status).
6) With external air supply (see mounting and operating instructions).
7) Permissible ambient temperature –45 °C only applicable with diaphragm and seals made of silicone rubber and metal cable gland.

Attachment and dimensions of the Type 3701 Solenoid Valve · All dimensions in mm

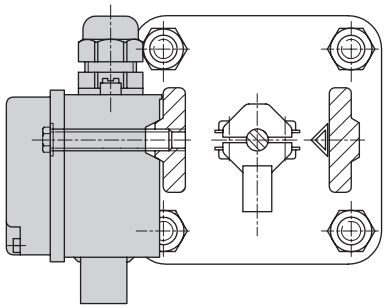

Attachment according to NAMUR, e.g. to Series 240 and 250 Valves

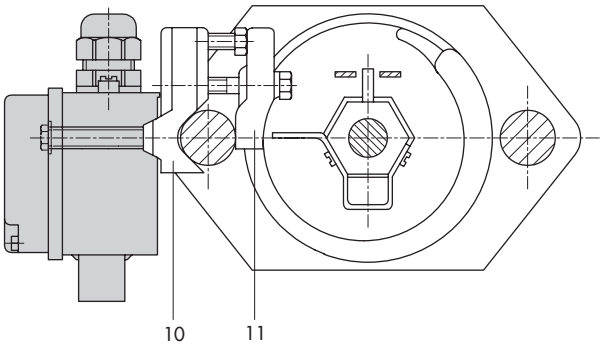

Attachment with clamping plate to valves with rod-type yoke
(10, 11: support with clamping plate, order no. 1400-5432)

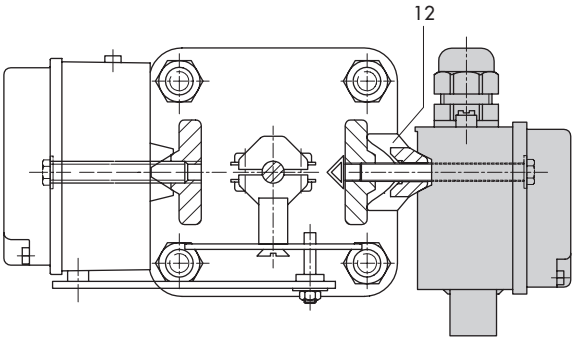

Attachment to valves in DN 15 to 80 with positioner
(12: distance piece, order no. 1400-5905)

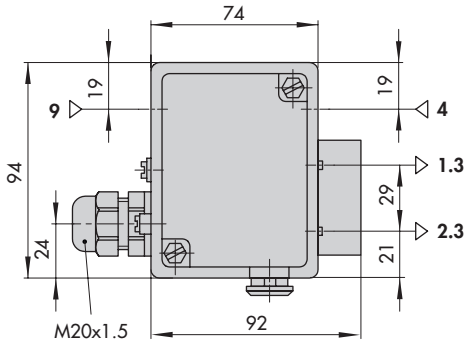

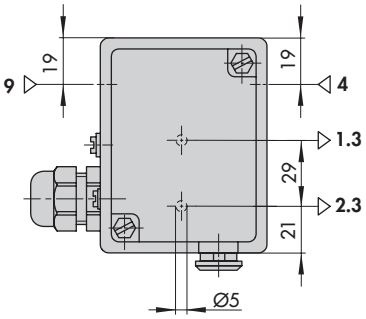

Adapter plate with NAMUR interface

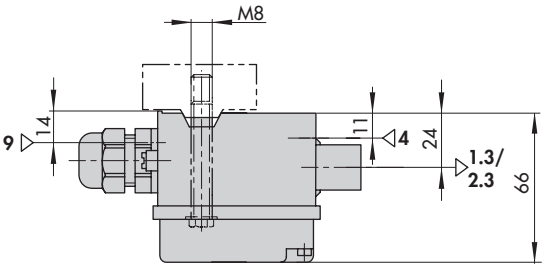

Dimensions for attachment according to NAMUR

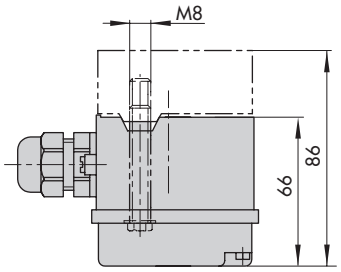

Dimensions for attachment to adapter plate

Fig. 3: *Dimensions*

Article code

Solenoid valve	Type 3701-	x	x	x	x	x	x	x	x	x	x	x	x	x
Explosion protection														
Without		0												
II 2G Ex ia IIC T6; II 2D Ex tb IIIC T80°C IP65, ATEX		1												
Ex ia CSA/FM		3												
II 3G Ex nA II T6; II 3G Ex ic IIC T6; II 3D Ex tc IIIC T80°C IP65, ATEX		8												
Nominal signal														
12 V DC			2											
24 V DC			3											
230 V AC (without explosion protection)			5											
115 V AC (without explosion protection)			6											
Switching function														
3/2-way, NC, K_{VS} = 0.25, circuit 1				0										
3/2-way, NO, K_{VS} = 0.25, circuit 2				1										
5/2-way, K_{VS} = 0.25				2										
Attachment														
NAMUR interface for rotary actuators including adapter plate (1400-5235)					0									
NAMUR rib for linear actuators					1									
Threaded connection														
G ¼						0								
¼ NPT						1								
Electrical connection														
Without cable gland, fitted with blanking plug							0	0						
Black cable gland M20x1.5							0	1						
Blue cable gland M20x1.5							1	1						
Adapter M20x1.5 to ½ NPT							1	2						
Black CEAG cable gland M20x1.5							1	3						
Cable gland M20x1.5, brass							1	4						
Degree of protection														
IP 54									0					
IP 65, with filter check valve made of polyamide									1					
IP 65, with filter check valve made of stainless steel									2					
Ambient temperature														
−20 to +80 °C										0				
−45 to +80 °C										2				
Safety approval														
Without											0			
SIL (only with 3/2-way function)											1			
TÜV (only with 3/2-way function)											2			
Special version														
Without												0	0	0
Output 1.3 sealed by a stainless steel M8 blanking plug												0	0	1
EAC approval Ex ia (see product list 1120-3010)												0	1	1

Summary of explosion protection approvals

Type	Certification			Type of protection/comments
3701	SIL	Number Date	V 60.09/14 rev.01 2006-02-22	Certification for safety-instrumented systems according to IEC 61508
	TÜV	Number Date	S 284 2013 E2 2014-01-16	Mounted on control valves according to DIN 3394-1, DIN EN 161, DIN 32725, DIN EN 264 and DIN 32730
3701-1	EC type examination certificate	Number Date	PTB 01 ATEX 2178 2006-02-22	II 2G Ex ia IIC T6 II 2D Ex tb IIIC T80°C IP65
	EAC	Number Date Valid until	RU C-DE.HA65.B.00806/20 2020-11-10 2025-05-11	1Ex ia IIC T6...T4 Gb X
3701-3	CSA	Number Date	1607252 2005-09-16	Ex ia IIC T6: Class I, Zone 0 Class I, Div.1,Groups A,B,C,D Class II, Div.1, Groups E,F,G Class I, Div.2,Groups A,B,C,D Class II, Div.2, Groups E,F,G
	FM	Number Date	3020228 2015-10-12	Class I,Zone 0 AEx ia IIC Class I,II,III;Div.1, Groups A,B,C,D,E,F,G Class I,Div.2, Groups A,B,C,D; Class II, Div,2 Groups F,G; Class III; Type 3R
3701-8	EC type examination certificate	Number Date	PTB 02 ATEX 2014 X 2006-02-22	II 3G Ex nA II T6 II 3G Ex ic IIC T6 II 3D Ex tc IIIC T80°C IP65

Accessories

Designation	Order no.
Adapter plate for rotary actuators with NAMUR interface according to VDI/VDE 3845	1400-5235
Mounting parts for valves with rod-type yokes according to NAMUR	1400-5342
Mounting parts for Series 240 in DN 15 to 80, in case positioner and/or limit switch is to be mounted as well	1400-5905
Polyethylene filter, connection G ¼, degree of protection IP 54 Filter check valve made of polyamide or 1.4571, degree of protection IP 65 or NEMA 4. Refer to Application Notes ▶ AB 08	8504-0066